0JWT.301.864 | REV. - | SHEET 1 OF 1

THE SIZES INDICATED ARE METRIC SIZE(mm).

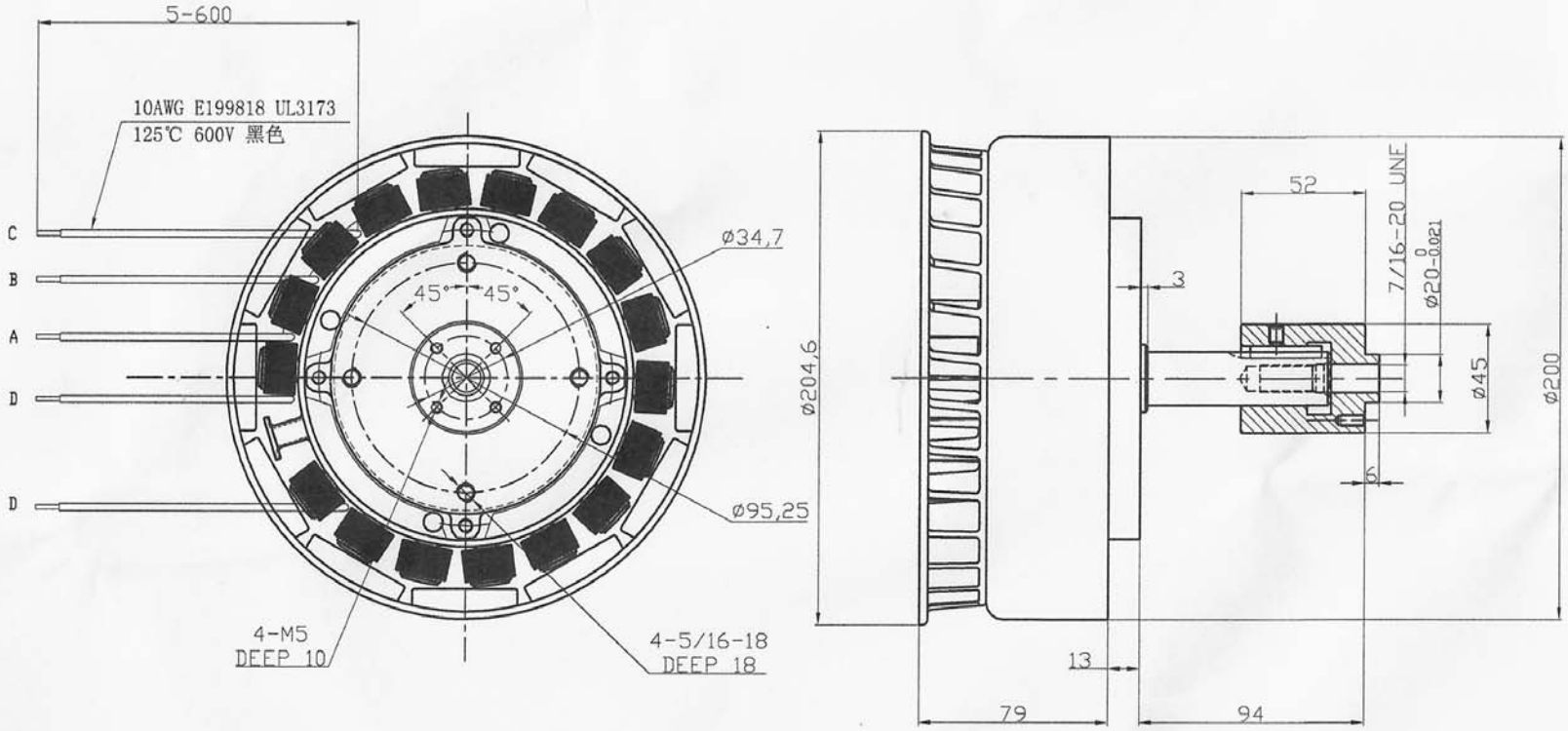

规格表

型号 MODEL	线组 WINDING	输出功率 (W) POWER OUT(W)	输出电压 (V.AC) VOLTAGE(V.AC)	额定转速 (RPM) LOADED SPEED(RPM)
ME1112	A B C	2000	160~280 3相 160~280 3-phase	1500
	D-D	100	11~19 1相 11~19 single phase	1500

REV.	CHANGES	BY	ECO NO.	DATE
-	-	-	-	-

DO NOT SCALE DRAWING
THIS DRAWING IS PROPRIETARY PROPERTY OF MOTENERGY INC CORPORATION DISCLOSED IN CONFIDENCE, WHICH MAY NOT BE USED OR DISCLOSED WITHOUT PERMISSION. RETURN PROMPTLY AFTER USE.

DIMENSIONING AND TOLERANCING PER ANSI Y14.5M-1994

CLASSIFICATION OF CHARACTERISTICS
CRITICAL (C):
EMMISIONS (E):
MAJOR (M):

MATERIAL

S/N: CODE:
MODEL NO:
SIM TO:

TITLE: OUTLINE

DRAWN: lxp 11.12.03
APPR:
DEPT:
SCALE: -

Motenergy, Inc
Slinger, WI USA

DESIGN VENDOR: -

0JWT.301.864 REV. - SHEET 1 OF 1

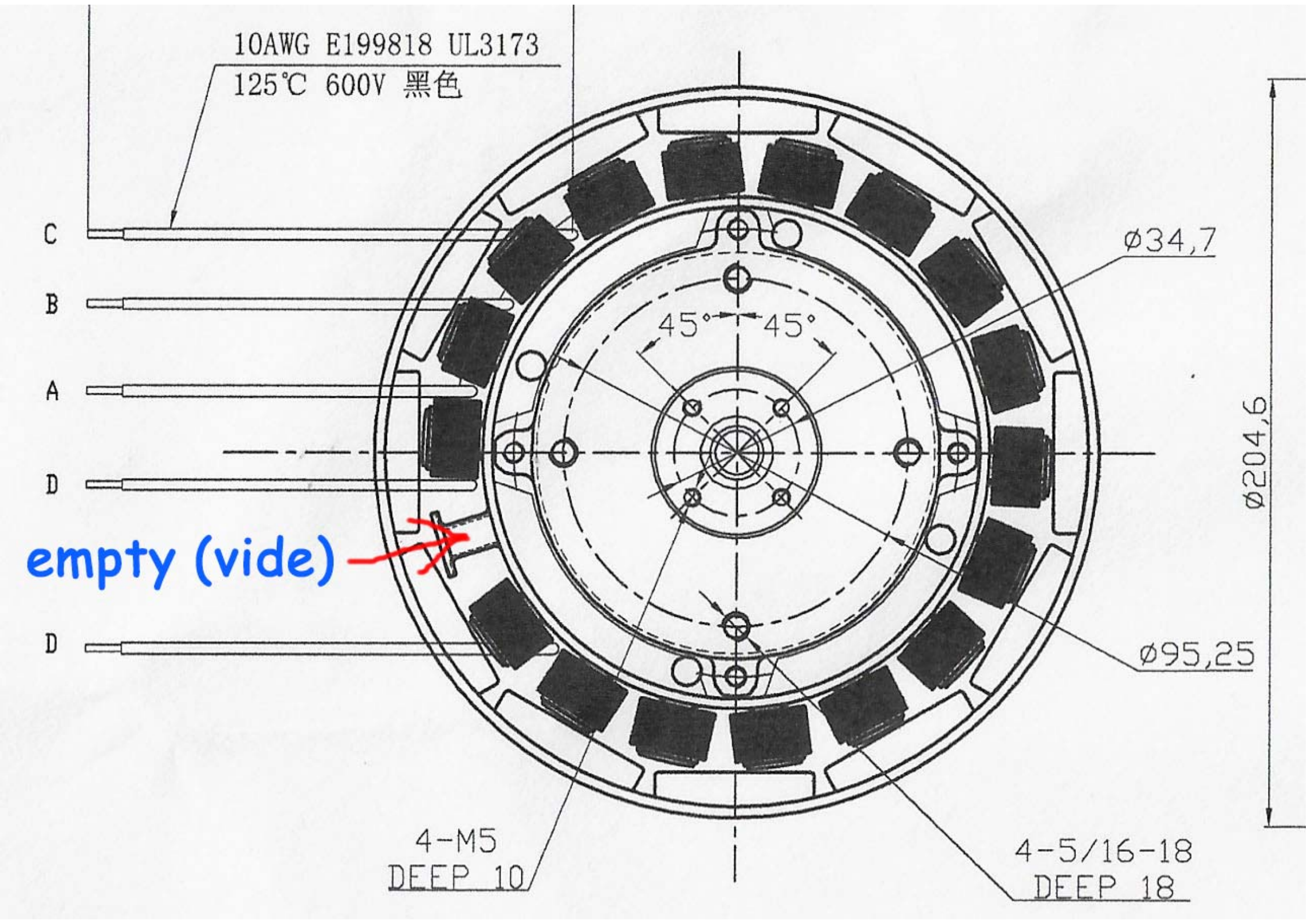
10AWG E199818 UL3173
125℃ 600V 黑色
C
B
A
D
D
empty (vide)
45°
45°
Ø34,7
Ø204,6
Ø95,25
4-M5
DEEP 10
4-5/16-18
DEEP 18

240V tri.

C (1)

B (2)

A (3)

D (4)

vide

E (5)

12VAC

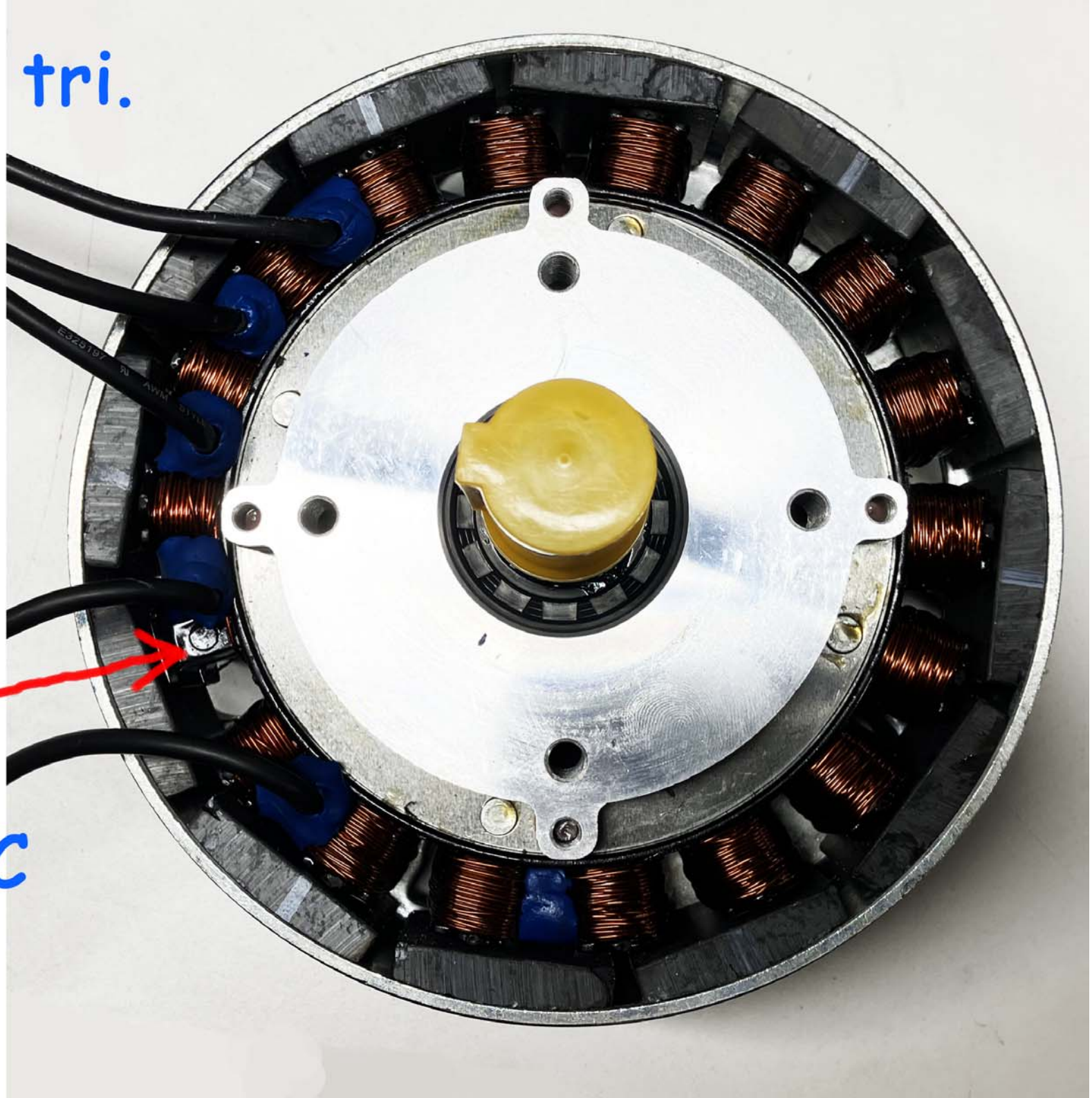

0JWT.301.864 | REV - | SHEET 1 OF 1 | THE SIZES INDICATED ARE METRIC SIZE(mm).

5

NOTE:
SHIP LOOSE IN BOX:
1)ADAPTER
2)KEY

ME1112

120 VAC
16 Amp

12 VAC
8 Amp

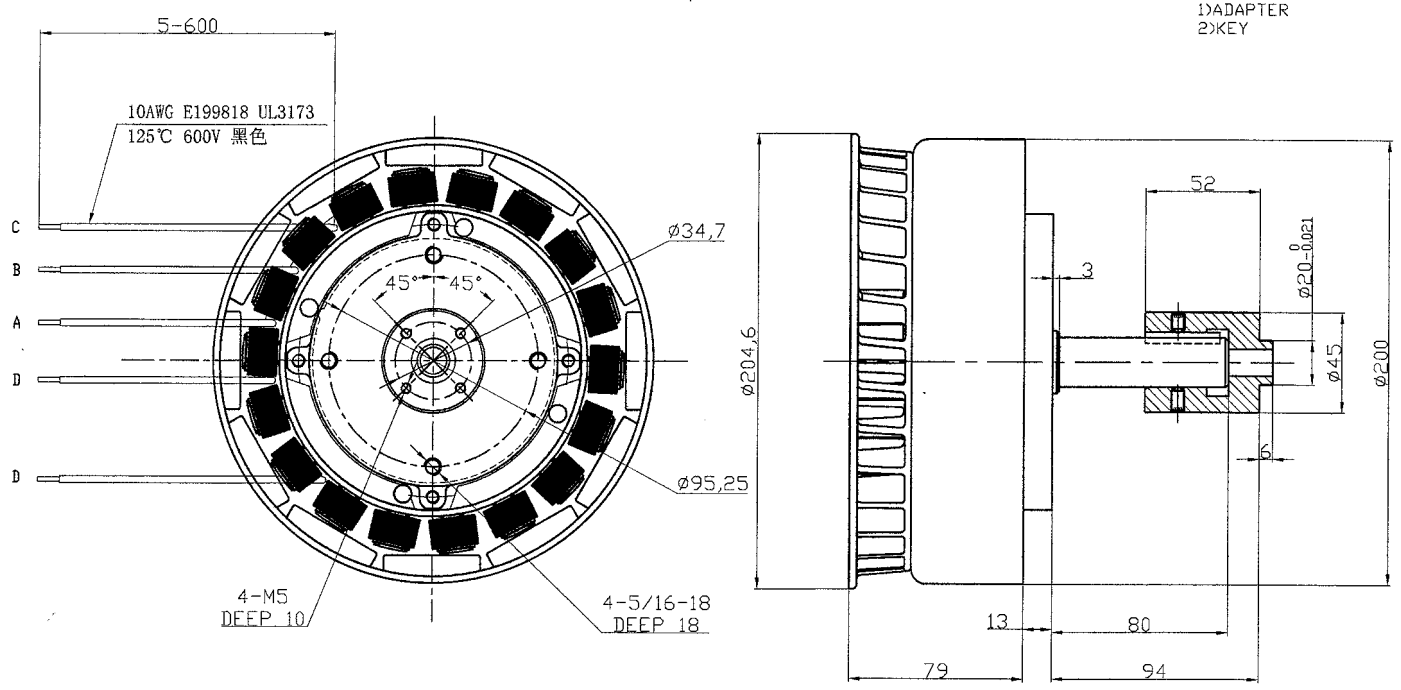

REV.	CHANGES	BY	ECO NO.	DATE
-	-	-	-	-
-	-	-	-	-
-	-	-	-	-
-	-	-	-	-
-	-	-	-	-
-	-	-	-	-
-	-	-	-	-

DO NOT SCALE DRAWING
THIS DRAWING IS PROPRIETARY PROPERTY OF MARS ELECTRIC LLC CORPORATION DISCLOSED IN CONFIDENCE, WHICH MAY NOT BE USED OR DISCLOSED WITHOUT PERMISSION. RETURN PROMPTLY AFTER USE.

DIMENSIONING AND TOLERANCING PER ANSI Y14.5M-1994

CLASSIFICATION OF CHARACTERISTICS
CRITICAL (C):
EMMISIONS (E):
MAJOR (M):

MATERIAL

S/N: CODE:
MODEL NO:
SIM TO:

TITLE: OUTLINE

DRAWN: lxp 11.10.13
APPR:
DEPT:
SCALE: -

Motenergy, Inc
Stinger, WI USA

DESIGN VENDOR: -

0JWT.301.864 | REV - | SHEET 1 OF 1